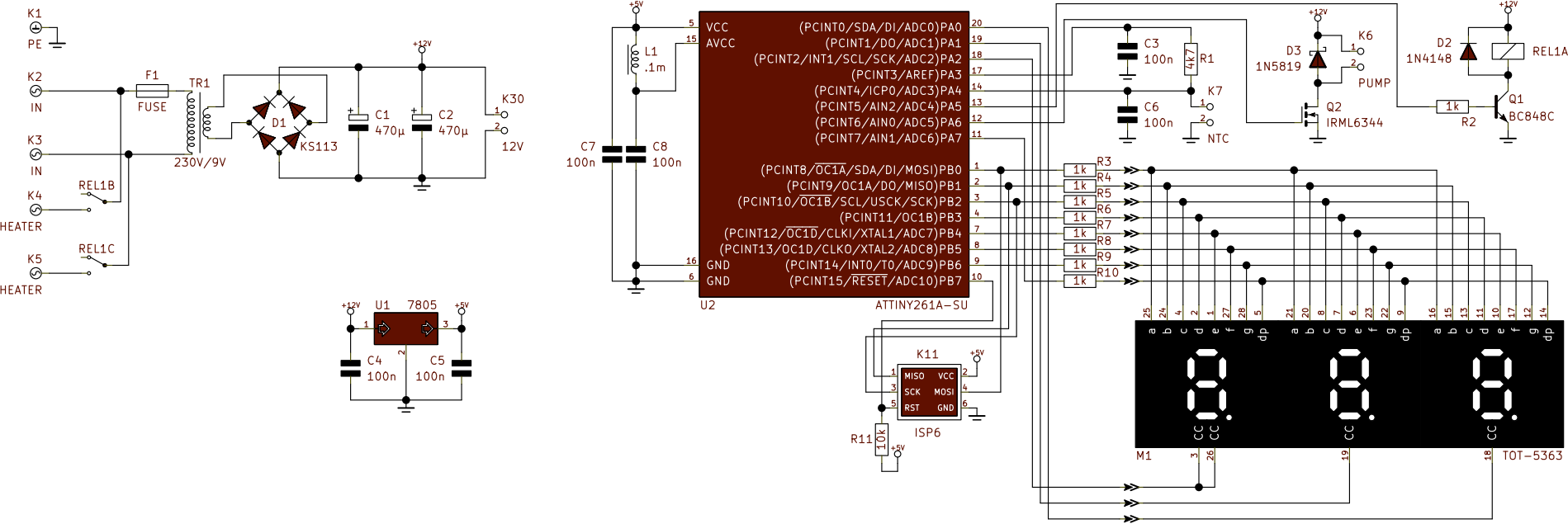
K1
PE
K2
IN
K3
IN
K4
HEATER
K5
HEATER
F1
FUSE
TR1
230V/9V
REL1B
REL1C
D1
KS113
+12V
C1
470µ
C2
470µ
K30
12V
U1
7805
C4
100n
C5
100n
+5V
L1
.1m
C7
100n
C8
100n
VCC
AVCC
GND
GND
(PCINT0/SDA/DI/ADC0)PA0
(PCINT1/DO/ADC1)PA1
(PCINT2/INT1/SCL/SCK/ADC2)PA2
(PCINT3/AREF)PA3
(PCINT4/ICP0/ADC3)PA4
(PCINT5/AIN2/ADC4)PA5
(PCINT6/AIN0/ADC5)PA6
(PCINT7/AIN1/ADC6)PA7
(PCINT8/OC1A/SDA/DI/MOSI)PB0
(PCINT9/OC1A/DO/MISO)PB1
(PCINT10/OC1B/SCL/USCK/SCK)PB2
(PCINT11/OC1B)PB3
(PCINT12/OC1D/CLKI/XTAL1/ADC7)PB4
(PCINT13/OC1D/CLKO/XTAL2/ADC8)PB5
(PCINT14/INT0/T0/ADC9)PB6
(PCINT15/RESET/ADC10)PB7
U2
ATTINY261A-SU
C3
100n
R1
4k7
C6
100n
K7
NTC
D3
1N5819
K6
PUMP
Q2
IRML6344
D2
1N4148
REL1A
1k
R2
Q1
BC848C
R3
R4
R5
R6
R7
R8
R9
R10
K11
MISO
VCC
SCK
MOSI
RST
GND
ISP6
R11
10k
M1
TOT-5363